OPERATION MANUAL

POWER CLEAN PE 1600 XT

CARPET EXTRACTOR

Item Code 19383
Edition 02 03 27

BASE GROUP PARTS

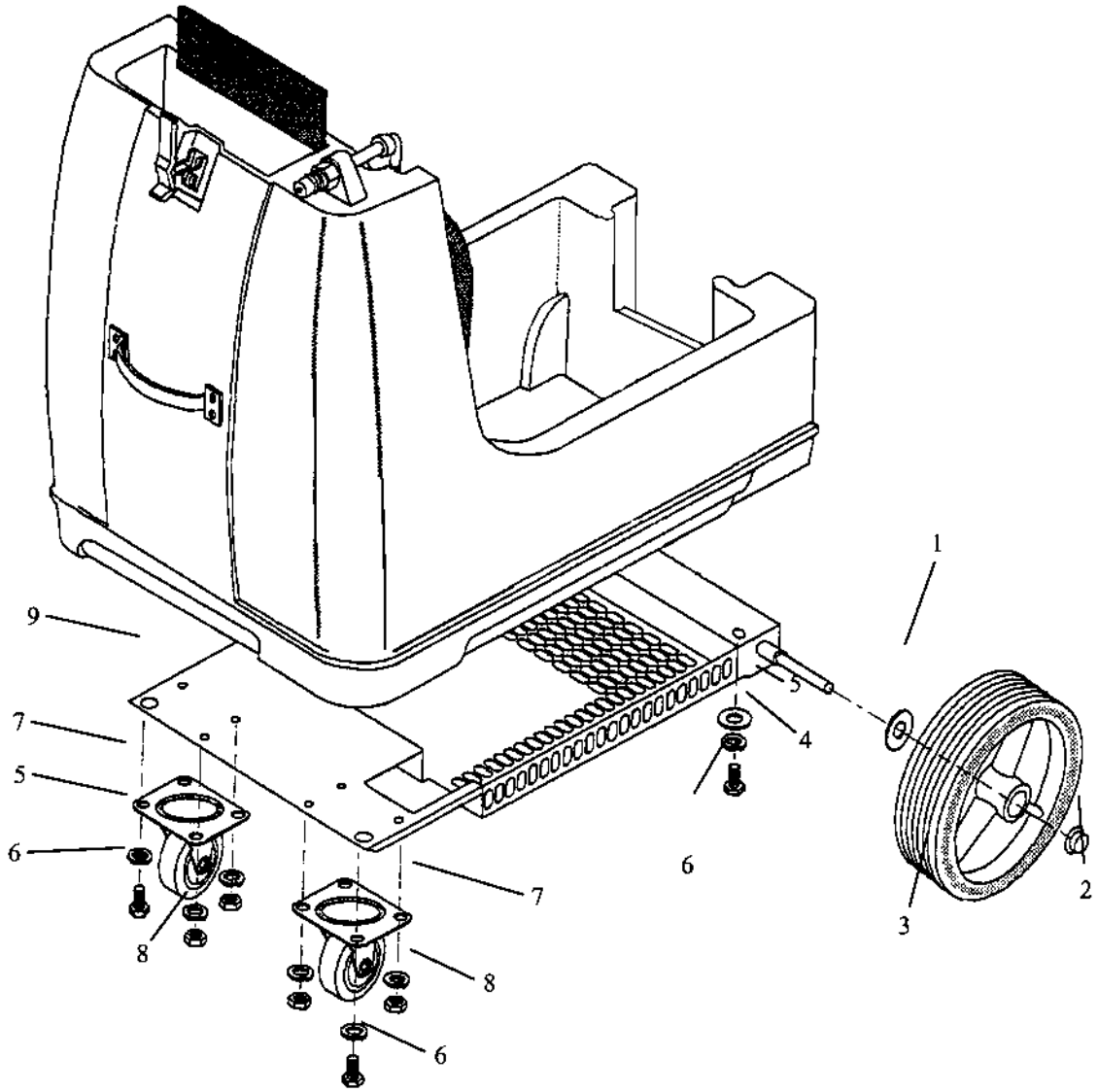

BASE PARTS LIST

REF	PART NO.	QTY	DESCRIPTION	SERIAL NO. FROM	NOTES:
1	3-87080	2	WASHER, .5 X 1.25 FLAT GR8 PLT		
2	3-57196	2	NUT, 1/2 PUSH-ON DOME CAP		
3	3-040-06	2	WHEEL 8" BLK CENTERED HUB		
4	3-87142	2	WASHER, .344 X .69 X .066 FLAT PLT		
5	3-87083	10	WASHER, 5/16 SPLIT LOCK PLTD		
6	3-70305	4	SCR, 5/16-18 X 3/4 HHCS		
7	3-040-03	2	CASTER SWIVEL 4"		
8	3-57031	6	NUT, 5/16-18 HEX		
9	3-56-502218	1	BASE ASM, CHEYENNE		

SOLUTION TANK GROUP

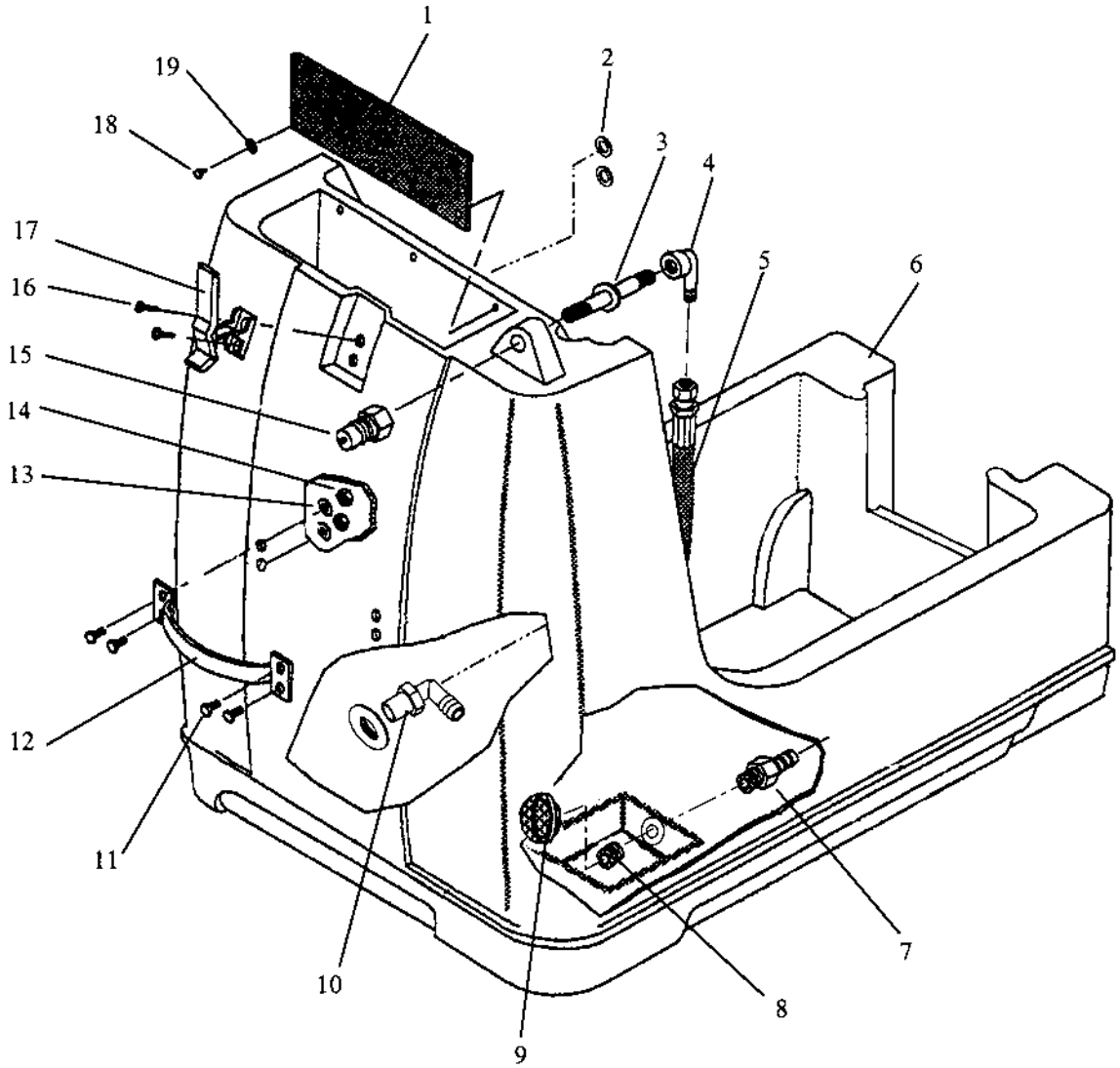

SOLUTION TANK PARTS LIST

REF	PART NO.	QTY	DESCRIPTION	SERIAL NO. FROM	NOTES:
1	3-43-807527	1	SPLASH SHIELD		
2	3-87017	2	WASHER, #8 FLAT		
3	3-56-502126	1	NIPPLE ASSEMBLY, QD MOUNT		
4	3-31017	1	ELBOW, 1/4 FPT X 1/4 FPT		
5	3-39598	1	HOSE, HP 42. 1/4MPT X 1/4MPT		
6	3-75401	1	TANK, SOLUTION DK BLUE		
7	3-40014	1	HOSEBARB, 1/4MPT X 3/8 DL		
8	3-56014	1	NIPPLE, 1/4 CLOSE		
9	3-290-08	1	STRAINER, 1/4 NPT 50 MESH		
12	3-40042	1	HOSEBARB, 1/4MPT X 1/2H 90D DL		
11	3-70744	4	SCR, 1/4-20 X 1 PFH BLK SS		
10	3-120-08	1	HANDLE, MACHINE BLACK		
13	3-87190	4	WASHER, SEAL 5/8 OD NEOPRENE		
14	3-57245	4	NUT, 1/4-20 HEX NYLOCK SS		
15	3-56012	1	NIPPLE, 1/4 FPT QD		
16	3-00-000368	2	RIVET, 5/32 OD X 1/2-58 GL ALUM.		
17	3-46-802531	1	LATCH, CONCEALED KEEPER		
18	3-70222	3	SCR, #8 X 1/2 PPHST BLK		
19	3-87095	3	WASHER, #10 FLAT PLTD		

PUMP GROUP

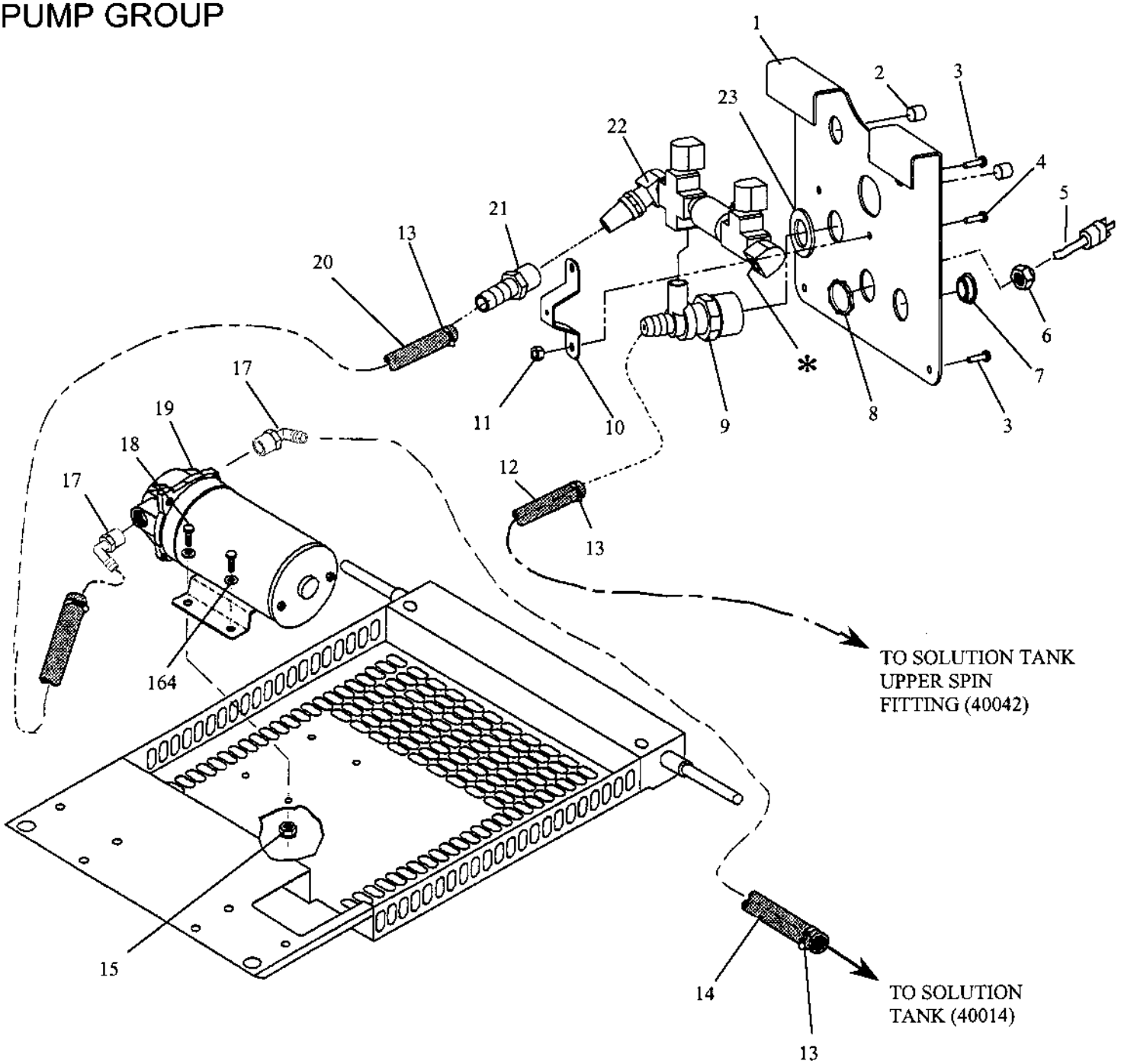

* Hose (39598) pg. 5-3 connects at this point.

PUMP PARTS LIST

REF	PART NO.	QTY	DESCRIPTION	SERIAL NO. FROM	NOTES:
1	3-62966	1	PLATE, MANIFOLD		
2	3-66017	2	PLUG, 1/4 BASS PIPE		
3	3-70088	1	SCR, 10-32 X 1/2 PPHMS SS		
4	3-70532	2	SCR, 10-32 X 1/2 PPHMS BLK		
5	3-060-04A	1	CORD ASM, 14/3 SJT X 25' BLK		
6	3-73505	1	STRAIN RELIEF, 1/2 NPT TRUMPET		
7	3-110-14	1	CAP PLUG 7/8"		
8	3-57040	1	NUT, 1/2 NPT CONDUIT		
9	3-84181	1	VALVE, BPR 125 PSI		
10	3-14454	1	BRKT, VALVE		
11	3-57104	2	NUT, 10-32 W/STAR WASHER PLTD		
12	3-82859	1	HOSE, 1/2 NYLOBRAID 20"		
13	3-20042	6	CLAMP, 3/8 HOSE (D-SLOT)		
14	3-39233	1	HOSE 3/8 RUBBER X 17"		
15	3-57090	4	NUT, 10-32 NYLOCK SS		
16	3-87014	4	WASHER, #8 INT. STAR		
17	3-40043	2	HOSEBARB, 3/8MPT X 3/8 90D		
18	3-70614	4	SCR, 10-32 X 1 1/8 PPHMS SS		
19	3-250-64A	1	SHURFLO 100PSI PUMP DEMAND		
20	3-39031	1	HOSE, 3/8 RUBBER X 24"		
21	3-40015	1	HOSEBARB, 1/4FPT X 3/8		
22	3-54182	1	MANIFOLD, ASM		
23	3-87173	1	WASHER, .765 ID X 1.31 OD X .09 T		

RECOVERY TANK GROUP

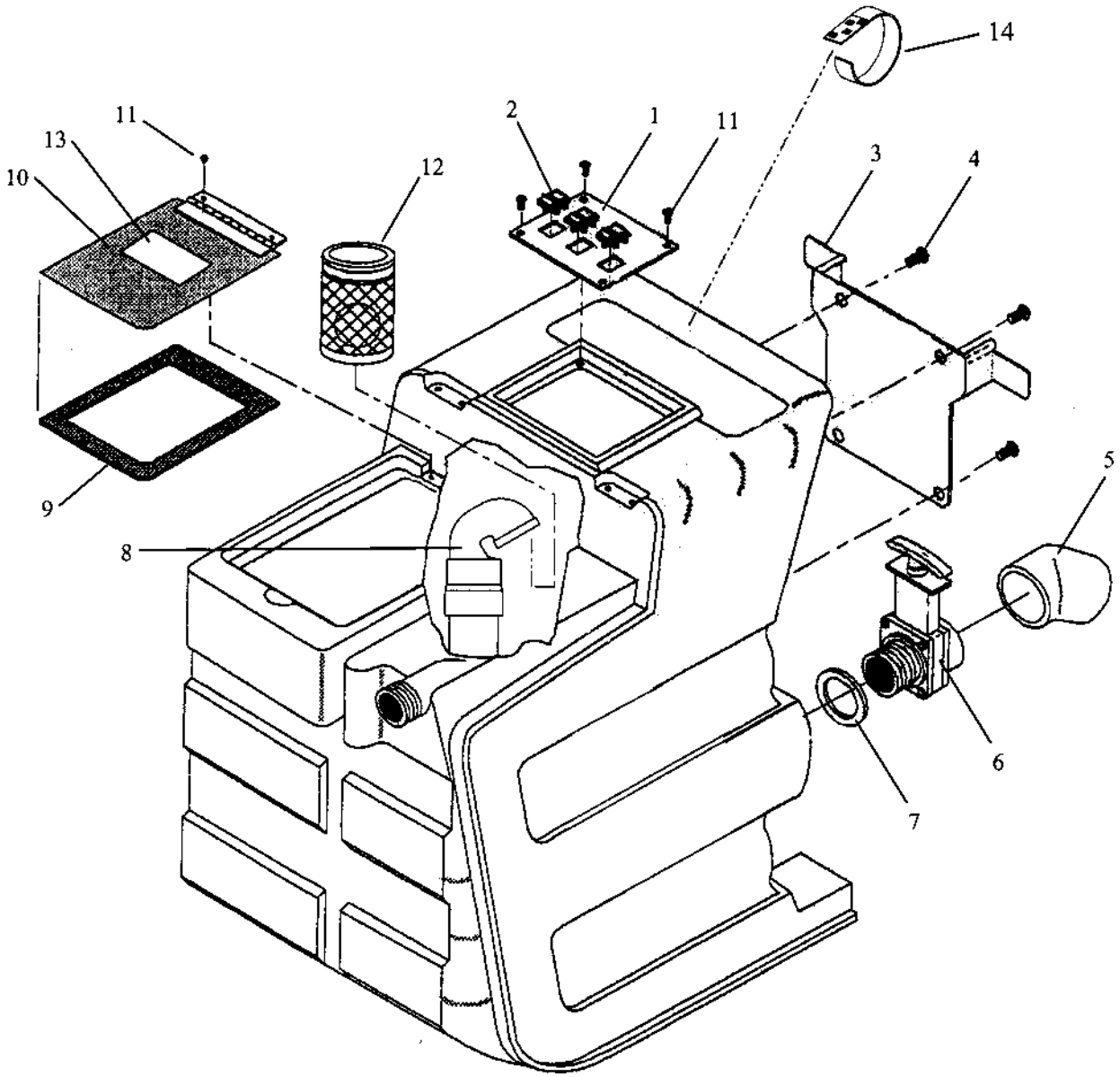

RECOVERY TANK PARTS LIST

REF	PART NO.	QTY	DESCRIPTION	SERIAL NO. FROM	NOTES:
1	3-48-941382	1	PLATE, SWITCH MODEL 2		
2	3-32-900195	3	SWITCH, DPST, LIGHTED ROCKER		
3	3-56-502173	1	ASSY, EXH DCT FLNG PRT405		
4	3-70384	4	SCR, 1/4-20 X 1/2 PHTR BLK		
5	3-11-800444	1	ELBOW, 2" 45D PVC SCH40		
6	3-15-808123	1	DUMP VALVE, 2'		
7	3-35256	1	GASKET, DUMP VALVE		
8	3-78474	1	VAC STACK ASM, 6 GAL PORTABLE		
9	3-43-807109	1	GASKET, VAC TANK		
10	3-56-502156	1	LID, VACUUM TANK		
11	3-70222	6	SCR, #8 X 1/2 PPHST BLK		
12	3-090-12A	1	FLOAT CAGE ASSY COMPLETE		
13	3-500009	1	LABEL, WARNING		
14	3-320-05	1	VELCRO STRAP		

VACUUM GROUP

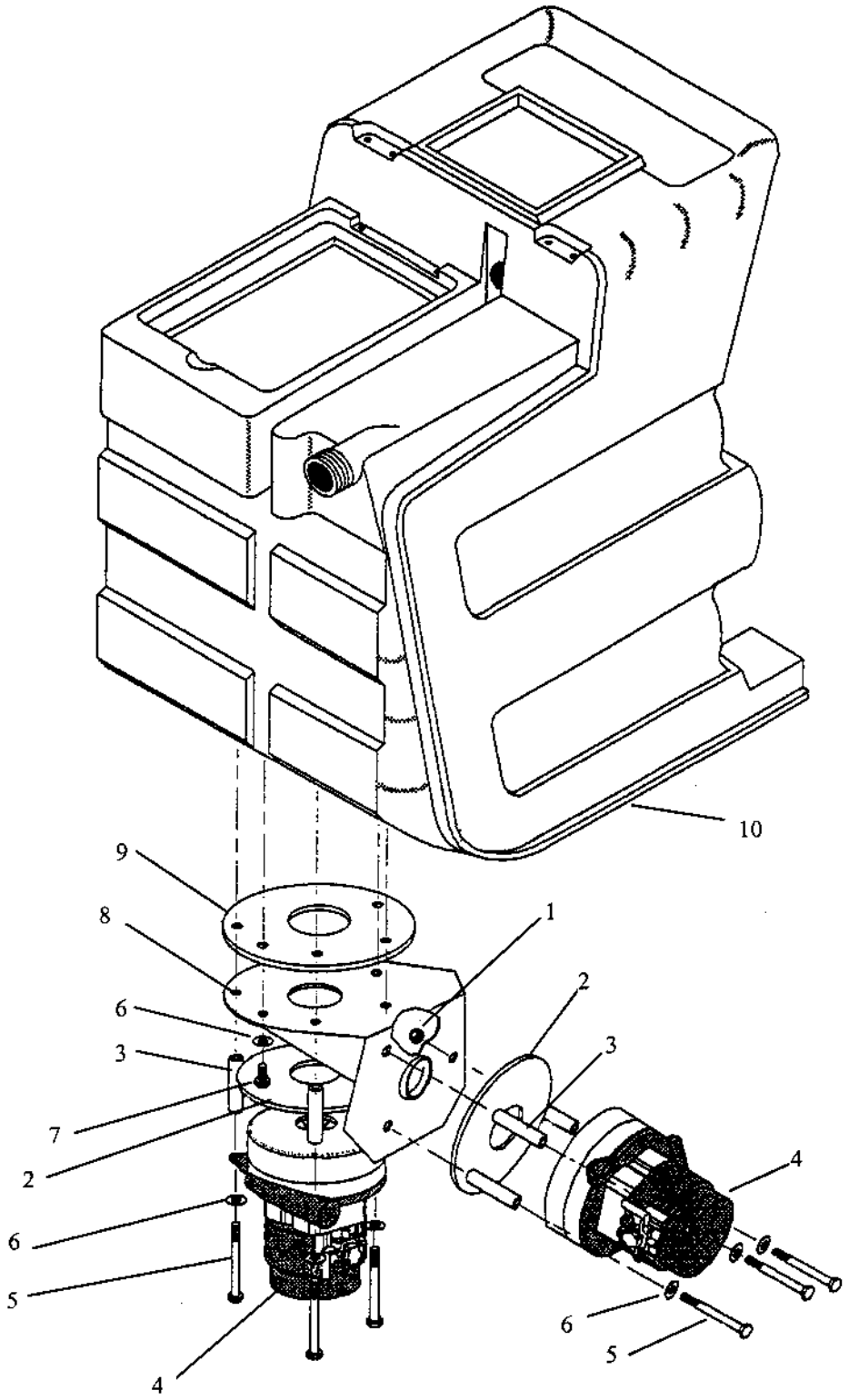

VACUUM PARTS LIST

REF	PART NO.	QTY	DESCRIPTION	SERIAL NO. FROM	NOTES:
1	3-57245	3	NUT, 1/4-20 HEX NYLOCK SS		
2	3-35011	2	GASKET, 3/8T 5.7 VAC FAN SEAL		
3	3-065-92	6	VAC SPACER 2 1/4 II STAGE		
4	3-360-04A	2	VACUUM 110 V TWO STAGE 116392-0		
5	3-70663	6	SCR, 1/4-20 X 3 1/4 HHCS PLT		
6	3-87013	9	WASHER, 1/4 ID X 5/8 OD SS		
7	3-70011	3	SCR, 1/4-20 X 5/8 HHCS SS		
8	3-56-502084	1	BRKT, VAC MOUNT, DUAL 2 STG		
9	3-43-807517	1	GASKET, VAC MTG.		
10	3-75402	1	TANK, RECOVERY DK BLUE		

TANK & LID PARTS

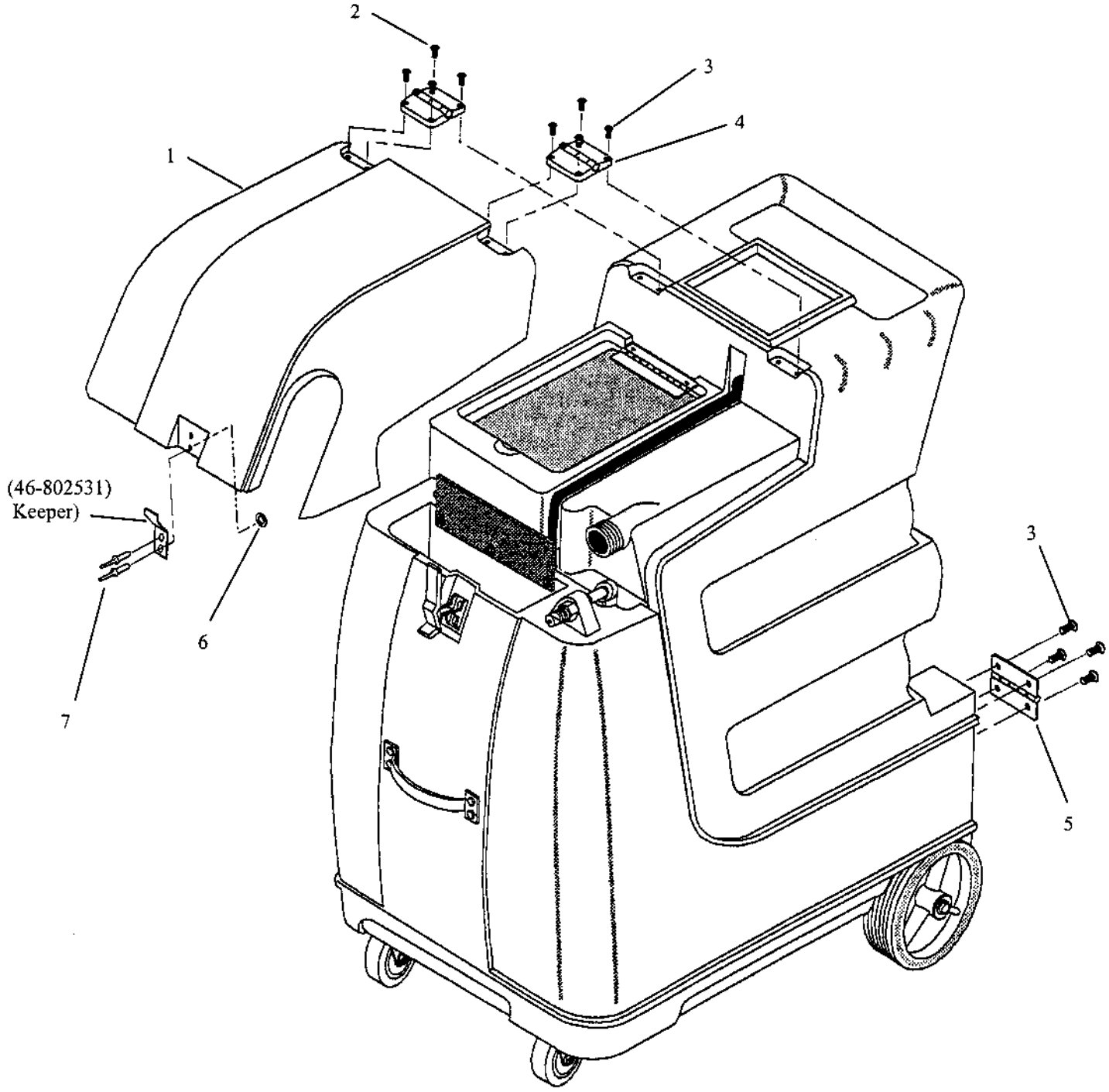

TANK & LID PARTS LIST

REF	PART NO.	QTY	DESCRIPTION	SERIAL NO. FROM	NOTES:
1	3-51377	1	LID, DK BLUE		
2	3-70222	4	SCR, #8 X 1/2 PPHST BLK		
3	3-70532	12	SCR, 10-32 X 1/2 PPHMS BLK NP		
4	3-46-802530	2	HINGE, SOUTHCO C6-34		
5	3-46-802540	2	HINGE, SOL. VAC TANK		
6	3-87017	1	WASHER, #8 FLAT		
7	3-00-000368	2	RIVET, 5/32OD X 1/2-5/8 GL ALUM		

WIRE GROUP

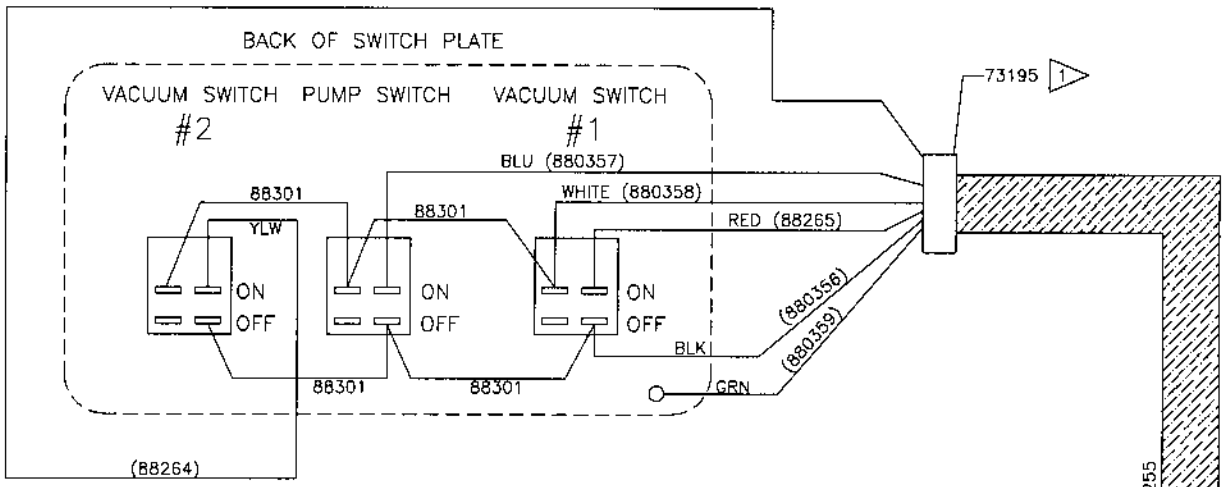
BACK OF SWITCH PLATE
VACUUM SWITCH #2
PUMP SWITCH
VACUUM SWITCH #1
73195
1
BLU (880357)
WHITE (880358)
RED (88265)
88301
YLW
ON
OFF
BLK
(880356)
(880359)
GRN
(88264)
29255

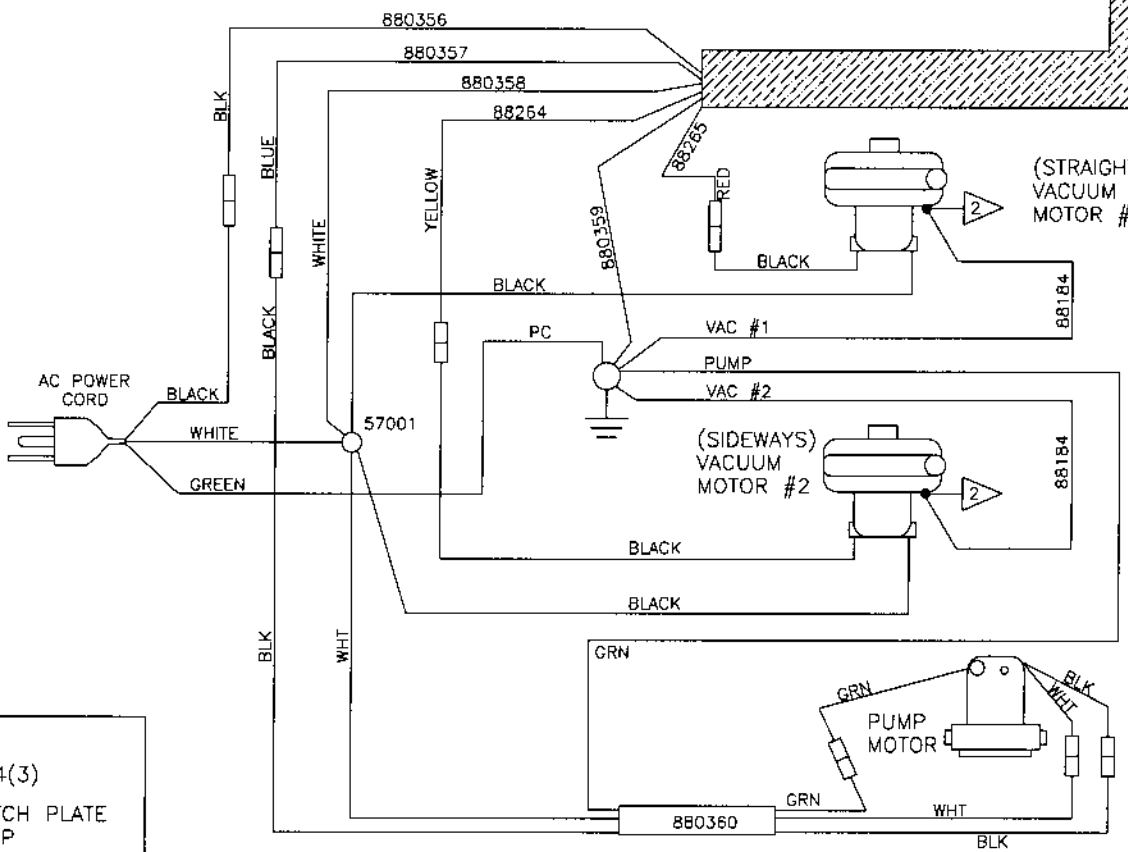
880356
880357
880358
88264
88265
BLK
BLUE
WHITE
YELLOW
RED
880359
BLACK
(STRAIGHT) VACUUM MOTOR #1
2
88184
PC
VAC #1
PUMP
VAC #2
AC POWER CORD
WHITE
GREEN
57001
(SIDEWAYS) VACUUM MOTOR #2
WHT
GRN
PUMP MOTOR
880360

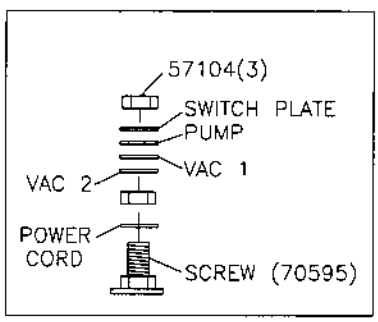
57104(3)
SWITCH PLATE
PUMP
VAC 1
VAC 2
POWER CORD
SCREW (70595)

SUGGESTED SPARE PARTS/NOTES

PART NO.	DESCRIPTION	REF/PAGE
3-250-64A	SHURFLO 100PSI PUMP DEMAND	19 pg. 5-5
3-110-14	CAP PLUG 7/8"	7 pg. 5-5
3-090-12A	FLOAT CAGE ASM COMPLETE	12 pg. 5-7
3-11-800444	ELBOW, 2" 45D PVC SCH40	5 pg. 5-7
3-360-04A	VACUUM 110V TWO STAGE 116392-0	4 pg. 5-9

NOTES: